Surname		Other Names	
Centre Number		Candidate Number	
Candidate Signature			

For Examiner's Use

General Certificate of Secondary Education
June 2008

DESIGN AND TECHNOLOGY (ELECTRONIC PRODUCTS)
Written Paper
Foundation Tier

3541/F

F

Monday 9 June 2008 1.30 pm to 3.30 pm

For this paper you must have:
- a pen, a pencil, a ruler, an eraser and a pencil sharpener.
  You may use a calculator.

Time allowed: 2 hours

Instructions
- Use black ink or black ball-point pen. Use pencil only for drawing.
- Fill in the boxes at the top of this page.
- Answer **all** questions.
- You must answer the questions in the spaces provided. Answers written in margins or on blank pages will not be marked.
- Do all rough work in this book. Cross through any work you do not want to be marked.
- Show the working of your calculations.

Information
- The maximum mark for this paper is 125.
- The marks for questions are shown in brackets.
- A list of formulae and other information, which you may wish to use in your answers, is provided on pages 2 and 3.
- You are reminded of the need for good English and clear presentation in your answers.

For Examiner's Use			
Question	Mark	Question	Mark
1		9	
2		10	
3			
4			
5			
6			
7			
8			
Total (Column 1) →			
Total (Column 2) →			
TOTAL			
Examiner's Initials			

You may need to use one or more of the following formulae when answering questions which include calculations.

Potential Difference	Potential Difference = Current × Resistance	$(V = I \times R)$
Series Resistors	$R_{total} = R_1 + R_2 + R_3$ etc	
Parallel Resistors	$\frac{1}{R_{total}} = \frac{1}{R_1} + \frac{1}{R_2} + \frac{1}{R_3}$	
Electrical Power	Electrical Power = Current × Potential Difference	$(P = I \times V)$

Potential Divider

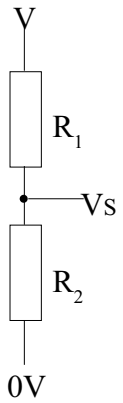

$$Vs = \frac{R_2}{R_1 + R_2} \times V$$

where Vs = signal value
V = supply voltage
R_1 and R_2 are resistance values

Inverting Op-Amps	$\text{Gain} = \frac{-Rf}{Rin}$	Where Rf = feedback resistor value Rin = input resistor value
Time Constant	Time Constant ≃ Resistance × Capacitance	$(T \simeq R \times C)$
Astable Frequency for 555	$f = \frac{1.44}{(R_1 + 2R_2) \times C}$	
Pulse duration	$= \frac{1}{\text{frequency}}$	
Time High	$Th = 0.693 \times (R_1 + R_2) \times C$	
Time Low	$Tl = 0.693 \times R_2 \times C$	
Mark Space Ratio	$= \frac{Th}{Tl}$	

You may need to use the following information when answering some of the questions.

The figures shown below and their decade multiples or submultiples are the series of preferred values in accordance with BS:2488.

E12 Resistor series 10, 12, 15, 18, 22, 27, 33, 39, 47, 56, 68, 82

E24 Resistor series 10, 11, 12, 13, 15, 16, 18, 20, 22, 24, 27, 30, 33, 36, 39, 43, 47, 51, 56, 62, 68, 75, 82, 91

Capacitor series 10, 22, 47

Resistor Colour Code

Colour	Band 1	Band 2	Band 3 (No. of 0s)	Band 4 (Tolerance)
Black	0	0	None	
Brown	1	1	0	
Red	2	2	00	
Orange	3	3	000	
Yellow	4	4	0000	
Green	5	5	00000	
Blue	6	6	000000	
Violet	7	7	–	
Grey	8	8	–	
White	9	9	–	
				Gold = 5%
				Silver = 10%

Turn over for the first question

Areas outside the box will not be scanned for marking

Answer **all** questions in the spaces provided.

1 This question is about research.

A student is designing a road safety product to be positioned on the ground behind a car to warn other motorists that a car has broken down.

The product must be able to be seen in poor light conditions.

1 (a) Identify **two** useful features for the product giving a reason for each one.

An example has been done for you.

e.g. The product needs to be stable so that it will not be blown over.

Feature 1 .....

.....

.....

.....

(2 marks)

Feature 2 .....

.....

.....

.....

(2 marks)

Areas outside the box will not be scanned for marking

1 (b) Describe **two** different methods of finding out information about existing road safety products.

Method 1 .....

.....

.....

.....

(2 marks)

Method 2 .....

.....

.....

.....

(2 marks)

8

Turn over for the next question

Areas outside the box will not be scanned for marking

2 This question is about designing the case of the product.

2 (a) In the box below sketch a design idea for the road safety product to be positioned on the ground behind a car.

This should show the following aspects:

- the specific materials which would be used.
- how it is made stable whilst standing on the ground.
- suitable for storing in the car.

(6 marks)

Areas outside the box will not be scanned for marking

2 (b) Using notes and sketches, develop your design for the case of the road safety product, to contain a circuit with six LEDs. Your design must include the following aspects:

- the position of the six LEDs.
- how the LEDs are held securely in place.
- the position of an off/on switch and how it is fitted in the case.
- access to the inside of the case.

(10 marks)
Quality of communication (3 marks)

19

Turn over ►

Areas outside the box will not be scanned for marking

3 This question is about components and systems.

As part of their research the student investigates different components.

3 (a) Look at the electronic component symbols below:

A	B	C	D	E	F
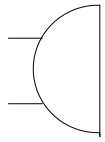	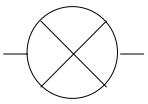	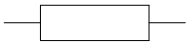	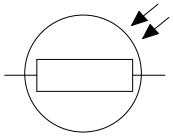	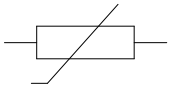	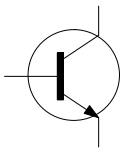

Which of the symbols above correspond with the names listed below? Indicate by writing the symbol letter in the box provided. An example has been done for you.

	Component Name		
e.g.	Thermistor	E	
(i)	Bulb/Lamp		*(1 mark)*
(ii)	Fixed Resistor		*(1 mark)*
(iii)	Buzzer		*(1 mark)*
(iv)	Transistor		*(1 mark)*

3 (b) Name an electronic component which best fits each of the descriptions given below:

3 (b) (i) emits light when a current flows from the anode to the cathode.

.....

(1 mark)

3 (b) (ii) its resistance decreases as the temperature increases.

.....

(1 mark)

3 (b) (iii) a wire melts when too large a current flows.

.....

(1 mark)

3 (b) (iv) it has three connections called anode, cathode and gate.

.....

(1 mark)

Areas outside the box will not be scanned for marking

3 (c) Name the logic gate which will only create a high output when both its inputs are high.

.....

(1 mark)

3 (d) Identify in which part of the system (input, process or output) the components shown in the table below are usually found. An example is done for you.

	Component	Input	Process	Output
e.g.		Input	Process	Output
(i)		Input	Process	Output
(ii)		Input	Process	Output
(iii)	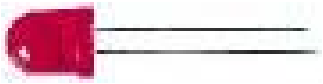	Input	Process	Output
(iv)		Input	Process	Output

Images reproduced by kind permission of Rapid Electronics Ltd www.rapidonline.com

(4 marks)

13

Turn over for the next question

Areas outside the box will not be scanned for marking

4 This question is about components and circuits.

4 (a) A diode is an example of a polarised component.

Explain what is meant by the term 'polarised component'.

.....

.....

.....

.....

(2 marks)

4 (b) Complete **Figure 1** by naming the leads of the diode symbol.

Figure 1

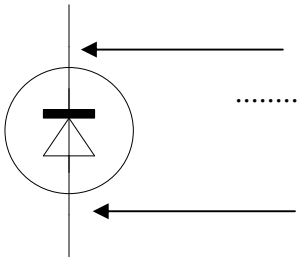

.....

.....

(2 marks)

4 (c) Draw on **Figure 2** the means of indicating the positive and negative leads of the diode.

Figure 2

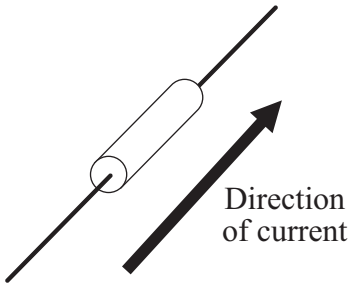

(1 mark)

Areas outside the box will not be scanned for marking

4 (d) Describe one use of a diode in a circuit.

.....

.....

.....

.....

(2 marks)

4 (e) **Figure 3** shows a basic thyristor latching circuit.

Figure 3

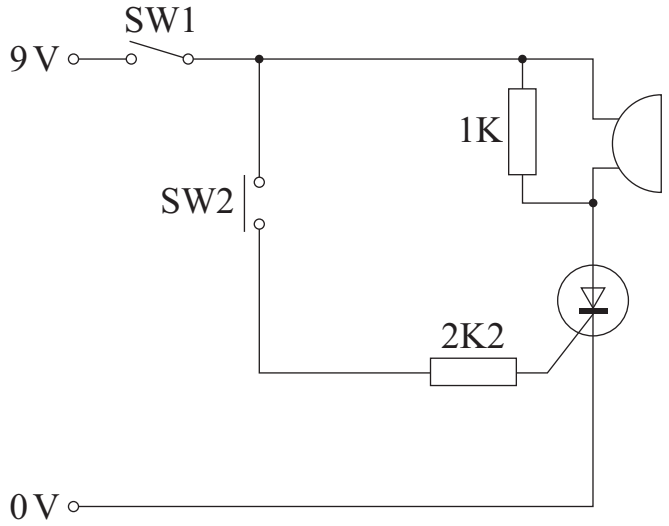

Briefly describe how the circuit works.

.....

.....

.....

.....

.....

.....

.....

.....

(4 marks)

Turn over for the next question

11

Areas outside the box will not be scanned for marking

5 This question is about an astable circuit.

During their research a student finds a 555 IC astable and decides to connect six LEDs to the ouput:

- three are sinking (on when the astable output is low).
- three are sourcing (on when the astable output is high).

An incomplete circuit diagram is shown in **Figure 4**.

Figure 4

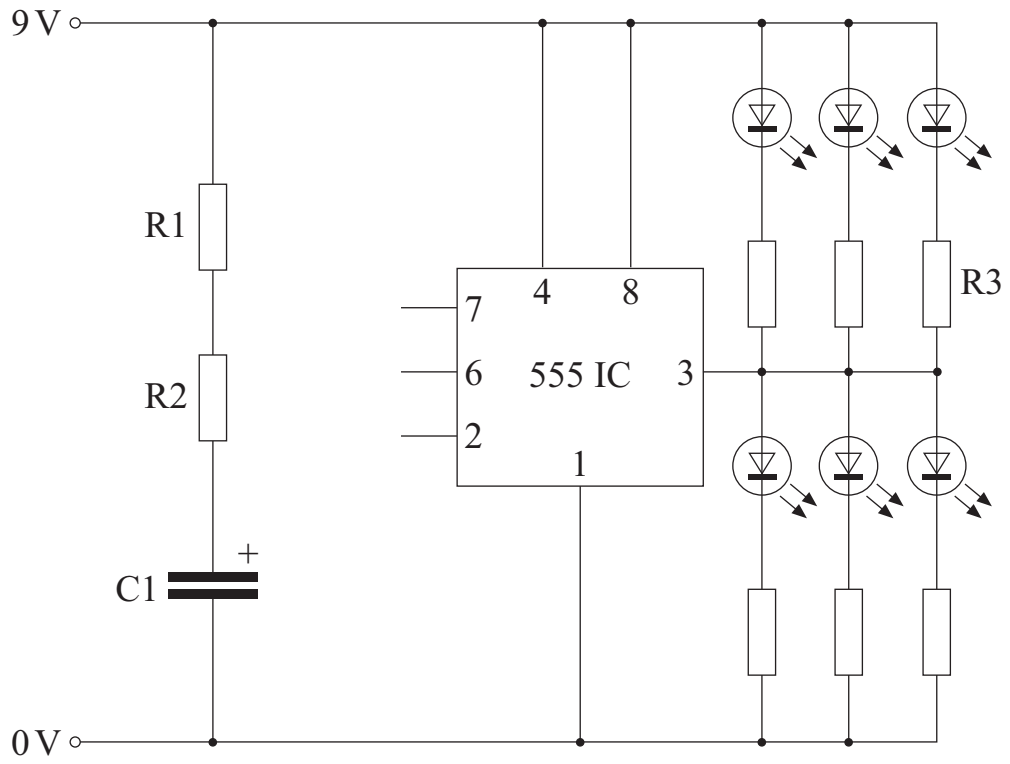

5 (a) Complete the circuit diagram in **Figure 4** by drawing the connections to make it work as an astable.

(3 marks)

Areas outside the box will not be scanned for marking

5 (b) Describe how the circuit could be changed to make the frequency of the output of the astable adjustable after the circuit is complete.

.....

.....

.....

.....

(2 marks)

5 (c) Each LED has a current limiting resistor connected in series.

Calculate the value of the resistor R3 in **Figure 4** if the LED requires 2V and 20 mA to be at full brightness.

Formula: .....

Working:

Answer (with units): .....

(5 marks)

5 (d) When the circuit in **Figure 4** was tested the LEDs in the top half were brighter than the LEDs in the bottom half.

Explain why this has happened and suggest a suitable modification to the circuit.

Explanation .....

.....

.....

.....

(2 marks)

Modification .....

.....

.....

.....

(2 marks)

Turn over for the next question

14

Areas outside the box will not be scanned for marking

6 This question is about designing a circuit.

The table in **Figure 5** shows the outputs for the pins of a 4017 IC Decade Counter.

Figure 5

Pin 1	Output 5	Pin 9	Output 8
Pin 2	Output 1	Pin 10	Output 4
Pin 3	Output 0	Pin 11	Output 9
Pin 4	Output 2	Pin 12	Divide by 10 Output
Pin 5	Output 6	Pin 13	Clock Enable
Pin 6	Output 7	Pin 14	Clock Input
Pin 7	Output 3	Pin 15	Reset
Pin 8	0V	Pin 16	+9V

6 (a) **Figure 6** on the opposite page shows an incomplete circuit diagram to make six LEDs flash in sequence using the 4017 IC Decade Counter.

Pin 3 (Output 0) is already connected to LED 0.

Complete the circuit diagram in **Figure 6** by:

6 (a) (i) Connecting the 0V and 9V pins to the power rails.

(2 marks)

6 (a) (ii) Connecting the remaining 5 LEDs to the correct outputs, so that the LEDs come on in the sequence 0, 1, 2, 3, 4 then 5.

(5 marks)

6 (a) (iii) Making the counter reset automatically to start the process again.

(1 mark)

6 (a) (iv) Connecting the output from the astable to the counter.

(1 mark)
Quality of drawing (1 mark)

Areas outside the box will not be scanned for marking

Figure 6

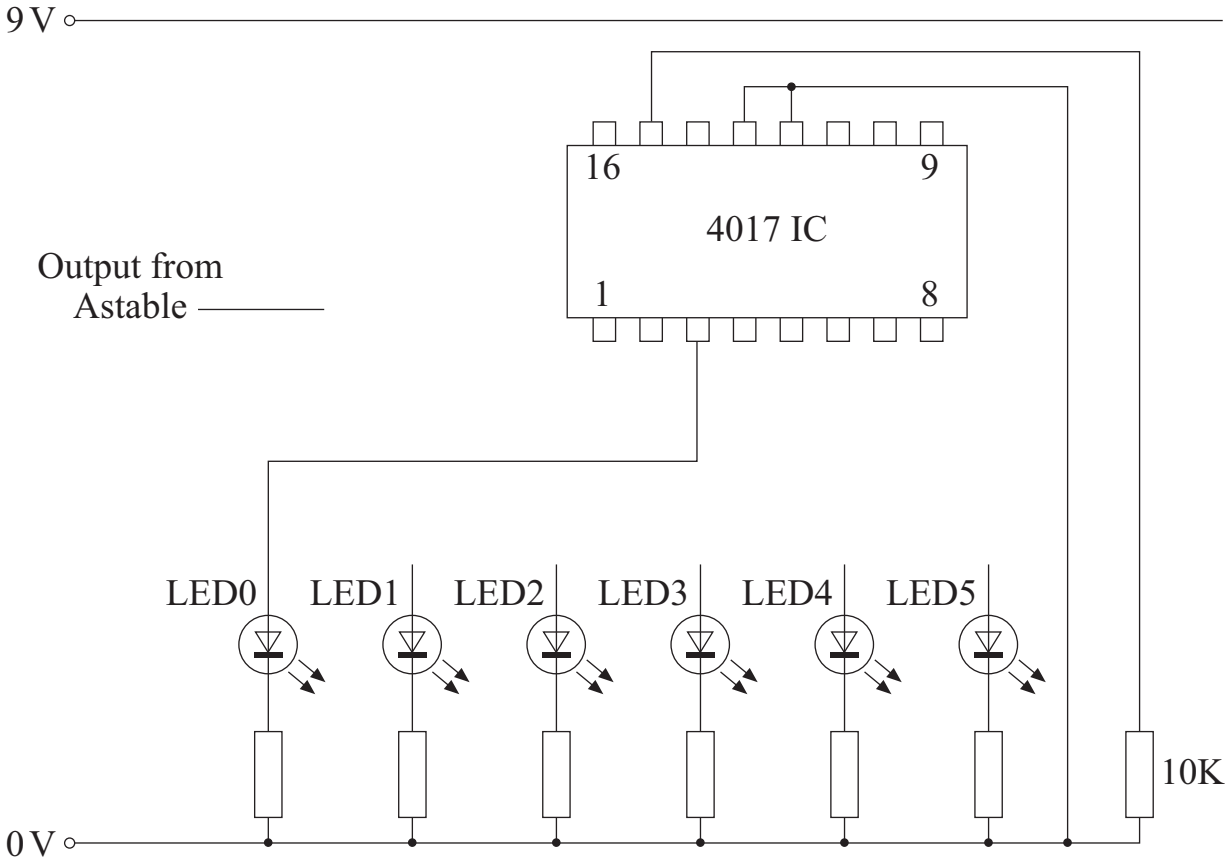

6 (b) In **Figure 6**, Pin 15 the Reset, has a 10K fixed resistor connecting the pin to 0 volts. What is the purpose of the resistor in the circuit?

.....

.....

.....

.....

(2 marks)

12

Turn over for the next question

Areas outside the box will not be scanned for marking

7 This question is about testing circuits.

Circuits can be tested using either a breadboard (prototype board) or using a computer simulator.

7 (a) **Figure 7** shows a diagram of a common breadboard.

Show clearly how the different holes are connected together.

Figure 7

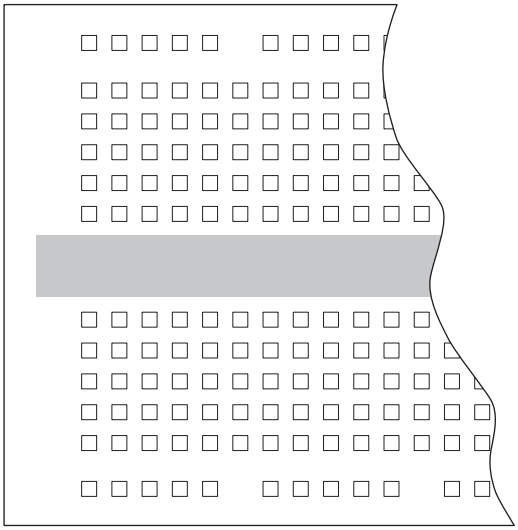

(4 marks)

7 (b) What is the purpose of the shaded area shown in **Figure 7**?

.....

.....

.....

.....

(2 marks)

7 (c) State **two** advantages and **two** disadvantages of using a breadboard to test a circuit idea.

Prototyping using breadboards	
Advantages	Disadvantages
1.	1. ....
2.	2. ....

(4 marks)

Areas outside the box will not be scanned for marking

7 (d) Give **three** reasons a designer would use CAD software to design a circuit board layout.

Reason 1 .....

.....

.....

.....

(2 marks)

Reason 2 .....

.....

.....

.....

(2 marks)

Reason 3 .....

.....

.....

.....

(2 marks)

16

Turn over for the next question

Areas outside the box will not be scanned for marking

8 This question is about the manufacture of the case for a product.

8 (a) In the box below show the main steps in producing a case by vacuum forming. A start point is given.

Mould made from M.D.F.

(7 marks)

8 (b) Name a suitable material which could be shaped using the vacuum forming process.

.....

(2 marks)

Areas outside the box will not be scanned for marking

8 (c) Explain the Health and Safety issues when making and shaping the mould from M.D.F.

.....

.....

.....

.....

.....

.....

.....

.....

(4 marks)

13

Turn over for the next question

Areas outside the box will not be scanned for marking

9 This question is about Social and Environmental issues.

The rapid expansion of electronics has greatly improved road safety.

9 (a) Describe the impact on road safety of the use of Speed Cameras.

.....

.....

.....

.....

.....

.....

.....

.....

.....

.....

.....

.....

.....

.....

(6 marks)

Areas outside the box will not be scanned for marking

9 A lorry, as shown in **Figure 8**, uses mirrors to allow the driver to have a clear vision of their position in relation to other road users.

Figure 8

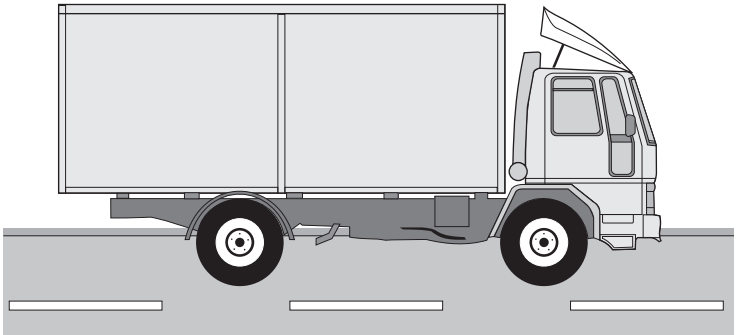

9 (b) Describe ways in which electronic products could be used to improve the vision of the driver.

.....

.....

.....

.....

.....

.....

.....

.....

.....

.....

.....

.....

(6 marks)

12

Turn over for the next question

Areas outside the box will not be scanned for marking

10 This question is about a Programmable Integrated Circuit (PIC).

10 (a) A student designing a road safety product is considering using a PIC in place of traditional integrated circuits. Give **three** different advantages of using a PIC in this instance.

Advantage 1 .....

.....

(1 mark)

Advantage 2 .....

.....

(1 mark)

Advantage 3 .....

.....

(1 mark)

10 (b) Select from the values below a voltage range suitable for powering the PIC.

Circle your answer.

0V to 3V 7V to 9V 3V to 5.5V

(1 mark)

10 (c) Select the number of legs typically found on a PIC chip. Circle your answer.

6 pins 8 pins 10 pins

(1 mark)

10 (d) **Figure 9** shows the pin layout for an 18 pin PIC. Show clearly which is Pin 3 and Pin 15.

Figure 9

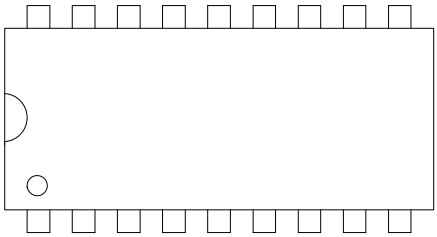

(2 marks)

END OF QUESTIONS

7

There are no questions on this page.

DO NOT WRITE ON THIS PAGE
ANSWER IN THE SPACES PROVIDED

There are no questions printed on this page

DO NOT WRITE ON THIS PAGE
ANSWER IN THE SPACES PROVIDED

Copyright © 2008 AQA and its licensors. All rights reserved.